M22 Series
Pushbuttons

Features
- ✓ For front panel cut-outs measuring ø22.3mm
- ✓ IP65 protection
- ✓ M3.5 screw terminals
- ✓ PCB (ø0.1t) terminals
- ✓ Tough and durable body material
- ✓ Available for multi-layer installations

⚠ All back facing terminal block buckles (SB) are ONLY compatible with Moujen in house control boxes (M22B).

Flathead (M22FP) | Extended head (M22XP) | Double Actuator (M22DP) | Selectors (M22S)

Recognition(s)
- ✓ CE – EN60947
- ✓ UL – UL508
- ✓ RoHS Compliant
- ✓ Reach Unaffected

Buzzer (M22BZ) | Pilot Lights (M22L/M22LC) | Emergency Stop (M22E/M22EL) | Key-operated (M22K) | Mushroom Actuator (M22MP/M22MPL) | Control Box (M22B)

Characteristics

Positive Opening	Electrical Contact	Terminal Type	(1-layer) Contact Form(s)	(1-layer) Possible Poles & Throws	(1-layer) Possible Actuation Sequence(s)
Yes(NC) & No(NO)	max 12 (2-layers: 4 contact blocks with 2 lamp blocks)	Screw(M3.5), or PCB	Each Block: A, B Two Blocks: A+B, 2A, 2B	SPST, 2*SPST, DPST-NO/NC, DPST	Single Make, or Single Break, or Make & Break, or Double Make, or Double Break

Operating Temp.	AC Rated	DC Rated	Oil Resist	Dust Resist	Water Resist	IP
-25 to 70 C	Switch: 6A 230V LED: 14mA 30~230V	Switch: 3A 24V LED: 14mA 30V	Yes	Yes	Yes	65

Operation Frequency	Service Life (min.ops)	Dielectric Strength
Momentary~3600/hr Alternate~1800/hr Selectors~2000/hr E-Stop~600/hr	Momentary=5,000,000 Alternate=1,000,000 Selectors=100,000 E-Stop=100,000	Between live part and ground=2500Vac, 1min Between terminals of different poles=2500Vac, 1min Between terminals of the same poles=1000Vac, 1min

Operating Humidity	Contact Resistance	Insulation Resistance	Vibration
85% RH max	50mΩ max. (initial)	100MΩ min. (500VDC)	1.5mm amplitude at 10-55Hz

Recommended tightening forces

Purpose	Screw type	Tightening
Control Box		8.5±0.5 kgf.cm
Panel Mount	Lock Ring	2.0 N·m

Circuitry

NC Blocks

NO Blocks

Additional Characteristics: Lamp blocks (LED)	
Codename in nomenclature = **E30**	12~30VDC, 5~14mA, 0.25W/24V
Codename in nomenclature = **E230**	85~264VAC, 5~15mA, 0.33W/24V

Additional Characteristics: Buzzer (M22BZ)	
Sound types:	Slow pulse, Fast pulse
Dimensions	Surface=ø29.7mm Length=53mm
Sound Pressure:	80dB at rated voltage within 1 meter
Sound Frequency:	2.5KHz±300HZ
Insulation Voltage:	60V AC/DC
Operating Voltage:	AC=110V, 220V DC=24V
Current Draw:	AC/DC<50mA
Operating Temperature:	-20°C ~ 65°C
Operating Humidity	85% RH max
Insulation Resistance	100MΩ min. (500VDC)
Dielectric Strength	Between live and dead part=1000Vac, 1min
Vibration	1.5mm amplitude at 10-55Hz
Service Life (min.)	10,000 hours

FONEE 豐立自動控制器材有限公司 WWW.FONEE.COM.TW

◆ Materials

Actuation touch part	Electrical contact point	Enclosure
PC Plastic	Silver-Nickel Alloy	Nylon+Glass fiber (V-0 rating)

◆ Nomenclature

Flathead	Actuation:	Type of Terminal:	Contact Block(s):	Lamp:	Cap/Lens Color:	Symbol:
M22FP –	**M**	**SF**	**01**		**G**	
ø22.3mm SPST, or DPST	**M**=Momentary **A**=Alternate (Maintained)	Front facing buckle (for use with A3 adapter) **SF**=Screw terminals **PF**=PCB terminals Back facing buckle (for use with control box) **SB**=Screw terminals	One block **10**=1x Form A **01**=1x Form B Two blocks **11**=1x Form A (&) 1x Form B **20**=2x Form A **02**=2x Form B	***Blank***= non-illume **E30**=LED30V **E230**=LED230V	**R**=Red **G**=Green **Y**=Yellow **W**=White **BL**=Blue Opaque **WO**=White **RO**=Red **BKO**=Black	**<I>** **<O>** ***Blank***= *None*

Note:
-Illumination colors from lamps are the same as lens colors; unless otherwise specified.
-Please contact Moujen before production to customize symbols to your needs. Only applicable to indicated items.
-Please consider PCB terminal pins when designing your systems. Pins will conflict multi-layer designs if installed on top.
⚠ All back facing terminal block buckles (SB) are ONLY compatible with Moujen in house control boxes (M22B).

Extended Head	Actuation:	Type of Terminal:	Contact Block(s):	Lamp:	Cap/Lens Color:	Symbol:
M22XP –	**M**	**SF**	**01**		**G**	
ø22.3mm SPST, or DPST	**M**=Momentary **A**=Alternate (Maintained)	Front facing buckle (for use with A3 adapter) **SF**=Screw terminals **PF**=PCB terminals Back facing buckle (for use with control box) **SB**=Screw terminals	One block **10**=1x Form A **01**=1x Form B Two blocks **11**=1x Form A (&) 1x Form B **20**=2x Form A **02**=2x Form B	***Blank***= non-illume **E30**=LED30V **E230**=LED230V	**R**=Red **G**=Green **Y**=Yellow **W**=White **BL**=Blue	***Blank***= *None*

Double Actuator	Actuation:	Type of Terminal:	Contact Block(s):	Lamp:	Cap Color:	Symbol:
M22DP –		**SF**	**02**	**E30**	**GR**	**<I,O>**
ø22.3mm 2x SPST	***Blank***= Momentary (All M22DP are momentary)	Front facing buckle (for use with A3 adapter) **SF**=Screw terminals **PF**=PCB terminals Back facing buckle (for use with control box) **SB**=Screw terminals	Two blocks **11**=1x Form A (&) 1x Form B **20**=2x Form A **02**=2x Form B	***Blank***=non-illume **E30**=LED30V **E230**=LED230V Center lamp illumes only WHITE color.	**GR**= Green & Red **WB**= White & Black	**<I,O>** **<Start,Stop>** **<+,->** ***Blank***= *None*

Note:
-Illumination colors from lamps are the same as lens colors; unless otherwise specified.
-Please contact Moujen before production to customize symbols to your needs. Only applicable to indicated items.
-Please consider PCB terminal pins when designing your systems. Pins will conflict multi-layer designs if installed on top.
⚠ All back facing terminal block buckles (SB) are ONLY compatible with Moujen in house control boxes (M22B).

Mushroom Actuator	Actuation:	Type of Terminal:	Contact Block(s):	Lamp:	Cap Color:	Symbol:
M22MP –	**M**	**SF**	**01**		**G**	**<O>**
ø22.3mm SPST, or DPST	**M**=Momentary **A**=Alternate (Maintained)	Front facing buckle (for use with A3 adapter) **SF**=Screw terminals **PF**=PCB terminals Back facing buckle (for use with control box) **SB**=Screw terminals	One block **10**=1x Form A **01**=1x Form B Two blocks **11**=1x Form A (&) 1x Form B **20**=2x Form A **02**=2x Form B	*(not applicable)*	**R**=Red **G**=Green **Y**=Yellow	**<I>** **<O>** **<Start>** **<Stop>** ***Blank***= *None*

Illuminated Mushroom Actuator	Actuation:	Type of Terminal:	Contact Block(s):	Lamp:	Cap/Lens Color:	Symbol:
M22MPL –	**M**	**SF**	**01**	**E30**	**R**	**<O>**
ø22.3mm SPST, or DPST	**M**=Momentary **A**=Alternate (Maintained)	Front facing buckle (for use with A3 adapter) **SF**=Screw terminals **PF**=PCB terminals Back facing buckle (for use with control box) **SB**=Screw terminals	One block **10**=1x Form A **01**=1x Form B Two blocks **11**=1x Form A (&) 1x Form B **20**=2x Form A **02**=2x Form B	**E30**=LED30V **E230**=LED230V	**R**=Red	**<I>** **<O>** **<Start>** **<Stop>** ***Blank***= *None*

Note:
-Illumination colors from lamps are the same as lens colors; unless otherwise specified.
-Please contact Moujen before production to customize symbols to your needs. Only applicable to indicated items.
-Please consider PCB terminal pins when designing your systems. Pins will conflict multi-layer designs if installed on top.
⚠ All back facing terminal block buckles (SB) are ONLY compatible with Moujen in house control boxes (M22B).

FONLEE 豐立自動控制器材有限公司 WWW.FONLEE.COM.TW

Selector Actuator	Actuator Style:	Operation:	Type of Terminal:	Contact Block(s):	Lamp:	Cap/Lens Color:
M22S –	**T**	**30**	**SF**	**01**	**E30**	**G**
ø22.3mm SPST, or DPST, or 2x SPST	**R**= Rotary **T**= Thumb grip	Two Positions **20**= 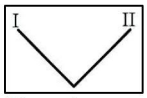 Alternate (Maintained) **22**= 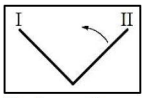 Spring-return from right ⚠ Only at position "II" will the switch actuate; max *two* form C may energize simultaneously ⚠ SPST or DPST; depending on contact blocks chosen. Three Positions **30**= 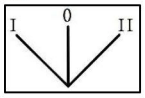 Alternate (Maintained) **32**= 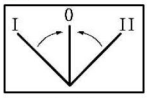 Left & right spring return ⚠ Positions "I" or "II" may actuate the switch; but only *one* form C energizes. ⚠ 1 or 2 SPST; depending on contact blocks chosen.	Front facing buckle (for use with A3 adapter) **SF**=Screw terminals **PF**=PCB terminals Back facing buckle (for use with control box) **SB**=Screw terminals	One block **10**=1x Form A **01**=1x Form B Two blocks **11**= 1x Form A (&) 1x Form B **20**=2x Form A **02**=2x Form B	***Blank***= non-illume **E30**= LED30V **E230**= LED230V (Lamps only applicable for "T" thumb grip style)	**R**=Red **G**=Green **Y**=Yellow **BL**=Blue Opaque **W**=White (Color only applicable for "T" thumb grip style)

Note:
-Illumination colors from lamps are the same as lens colors; unless otherwise specified.
-Please contact Moujen before production to customize symbols to your needs. Only applicable to indicated items.
-Please consider PCB terminal pins when designing your systems. Pins will conflict multi-layer designs if installed on top.
⚠ All back facing terminal block buckles (SB) are ONLY compatible with Moujen in house control boxes (M22B).

Key Actuator	Operation:	Type of Terminal:	Contact Block(s):	Key Removal Positions:
M22K –	**30**	**SF**	**01**	**3B**

ø22.3mm

SPST, or
DPST, or
2x SPST

Two Positions

20=

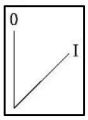

Alternate
(Maintained)

22=

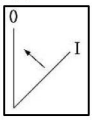

Spring-return
from right

⚠ Only at position "I" will the switch actuate; max *two* form C may energize simultaneously

⚠ SPST or DPST; depending on contact blocks chosen.

Three Positions

30=

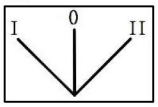

Alternate
(Maintained)

32=

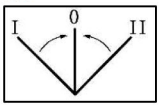

Left & right
spring return

⚠ Positions "I" or "II" may actuate the switch; but only *one* form C energizes.

⚠ 1 or 2 SPST; depending on contact blocks chosen.

Front facing buckle
(for use with A3 adapter)
SF=Screw terminals
PF=PCB terminals

Back facing buckle
(for use with control box)
SB=Screw terminals

One block
10=1x Form A
01=1x Form B

Two blocks
11=
1x Form A (&)
1x Form B
20=2x Form A
02=2x Form B

Two Positions

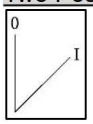

A=
Only at "O"

B=
Both "O" and "I"

Three Positions

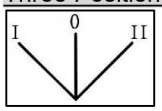

A=
Only at "O"

B=
All three "I, O, II"

⚠ Keys are always non-removable and non-insertable at positions with spring-return function.

FONLEE 豐立自動控制器材有限公司 WWW.FONLEE.COM.TW

Note:
-Illumination colors from lamps are the same as lens colors; unless otherwise specified.
-Please contact Moujen before production to customize symbols to your needs. Only applicable to indicated items.
-Please consider PCB terminal pins when designing your systems. Pins will conflict multi-layer designs if installed on top.
⚠ All back facing terminal block buckles (SB) are ONLY compatible with Moujen in house control boxes (M22B).

Pilot light	Actuator Style:	Type of Terminal:	Lamp:	Cap/Lens Color:	Symbol:
M22L –	**F**	**SF**	**E30**	**G**	
ø22.3mm	**F**=Flathead **X**=Extended-head	Front facing buckle (for use with A3 adapter) **SF**=Screw terminals **PF**=PCB terminals Back facing buckle (for use with control box) **SB**=Screw terminals	**E30**=LED30V **E230**=LED230V	**R**=Red **G**=Green **Y**=Yellow **W**=White **BL**=Blue	***Blank***= *None*

Compact Pilot light	Actuator Style:	Lamp:	Cap/Lens Color:
M22LC –	**F**	**E24**	**G**
ø22.3mm No blocks needed	**F**=Flathead **X**=Extended-head	**E06**=LED6VDC **E12**=LED12VDC **E24**=LED24VDC **E110**=LED110VAC **E220**=LED220VAC	**R**=Red **G**=Green **Y**=Yellow **W**=White **BL**=Blue

Note:
-Illumination colors from lamps are the same as lens colors; unless otherwise specified.
-Please contact Moujen before production to customize symbols to your needs. Only applicable to indicated items.
-Please consider PCB terminal pins when designing your systems. Pins will conflict multi-layer designs if installed on top.
⚠ All back facing terminal block buckles (SB) are ONLY compatible with Moujen in house control boxes (M22B).

Emergency Stop	Operation:	Type of Terminal:	Contact Block(s):	Lamp:	Cap Color:
M22E –	**T**	**SF**	**20**		**R**
ø22.3mm SPST, or DPST	**P**=Pull to release **K**=Key to release **T**=Twist to release	Front facing buckle (for use with A3 adapter) **SF**=Screw terminals **PF**=PCB terminals Back facing buckle (for use with control box) **SB**=Screw terminals	One block **10**=1x Form A **01**=1x Form B Two blocks **11**=1x Form A (&) 1x Form B **20**=2x Form A **02**=2x Form B	*(not applicable)*	**R**=Red

Illuminated Emergency Stop	Operation:	Type of Terminal:	Contact Block(s):	Lamp:	Cap/Lens Color:
M22EL –	**T**	**SF**	**20**	**E30**	**R**
ø22.3mm SPST, or DPST	**P**=Pull to release **T**=Twist to release	Front facing buckle (for use with A3 adapter) **SF**=Screw terminals **PF**=PCB terminals Back facing buckle (for use with control box) **SB**=Screw terminals	One block **10**=1x Form A **01**=1x Form B Two blocks **11**=1x Form A (&) 1x Form B **20**=2x Form A **02**=2x Form B	**E30**=LED30V **E230**=LED230V	**R**=Red

Note:
-Illumination colors from lamps are the same as lens colors; unless otherwise specified.
-Please contact Moujen before production to customize symbols to your needs. Only applicable to indicated items.
-Please consider PCB terminal pins when designing your systems. Pins will conflict multi-layer designs if installed on top.
⚠ All back facing terminal block buckles (SB) are ONLY compatible with Moujen in house control boxes (M22B).

FONLEE 豐立自動控制器材有限公司 WWW.FONLEE.COM.TW

Control Box	Box hole(s):	Color:
M22 –	**B2**	**YB**
ø22.3mm	**B1**=one hole **B2**=two holes **B3**=three holes	**YB**=Yellow top, black bottom **IB**=Ivory top, black bottom

Control Box alone does not come with actuators, illumination units, or contact blocks.
Control Box cable wire through holes are not pre-made. M20 and M25 sizes possible.

4 sides; M20 or M25 sizes.

Conduit sold separately.

Buzzer	AC/DC Voltage:	Sound:	Illumination: (Optional only for 24VDC)
M22BZ –	**024DC**	**F**	**L**
ø22.3mm	**220AC**=220VAC **110AC**=110VAC **024DC**=24VDC	**S**=Slow pulse **F**=Fast pulse	**Blank**=none **L**=Red steady-light indication

Except illumination types, all else are opaque black.

◆ Unit Dimensions

*Measurements in *millimeters*

Flat head (FP)

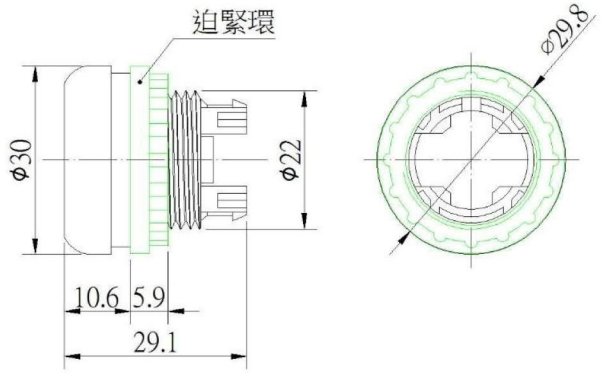

Extended head (XP)

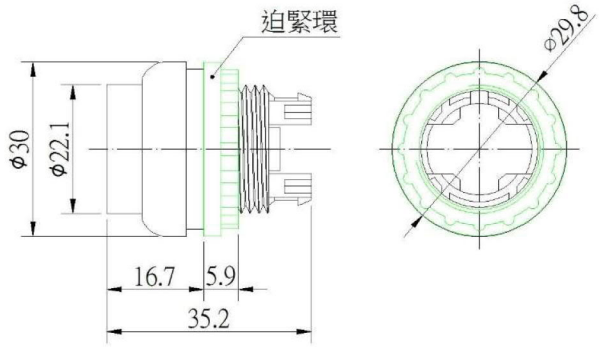

Double pushbutton (DP)

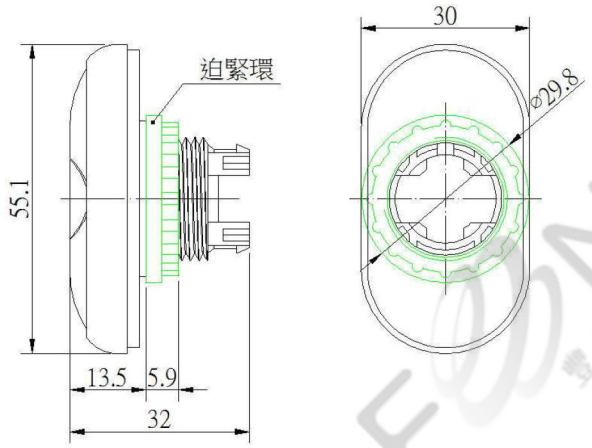

Mushroom pushbutton (MP, MPL)

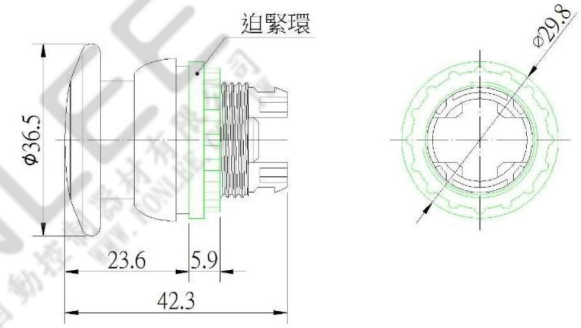

Selector (S) - *Rotary*

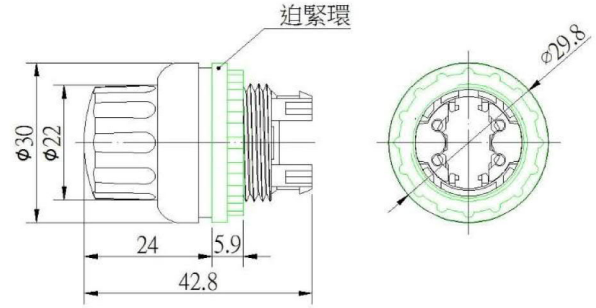

Selector (S) - *Thumb grip*

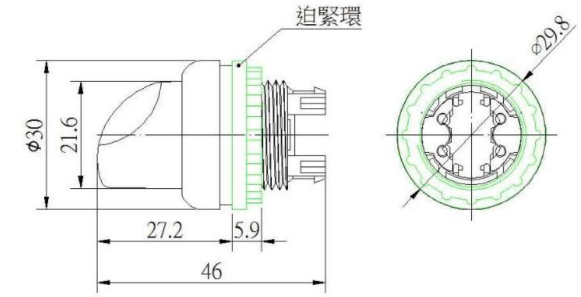

Key Selector (K)

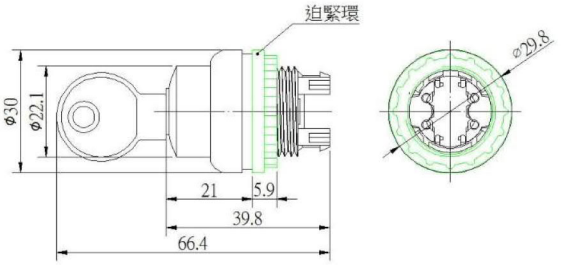

Pilot light (L) -*Flat head*

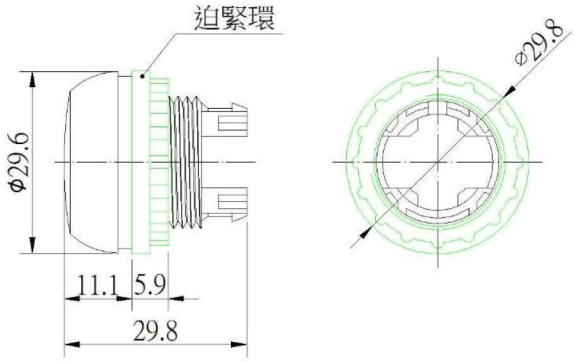

Pilot light (L) -*Extended head*

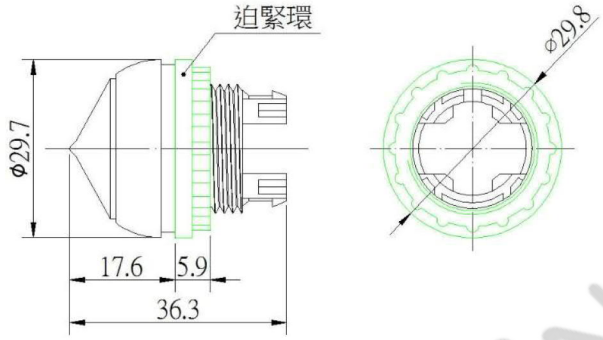

Compact pilot light (LC) - *Flat head*

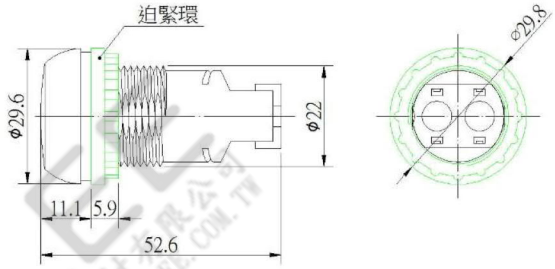

Compact pilot light (LC) - *Extended head*

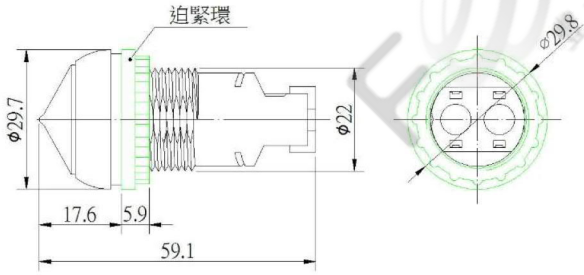

Emergency stop (E, EL) -*Pull or Turn to release*

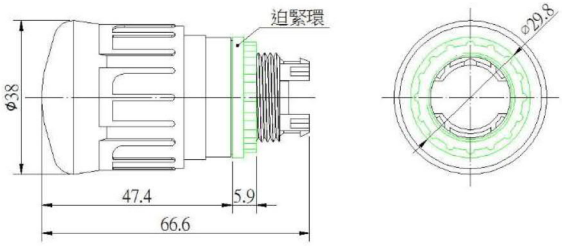

Emergency stop (E) -*Key to release*

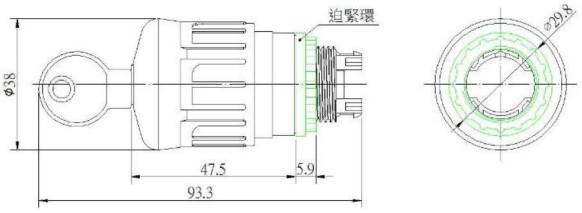

Buzzer (BZ)

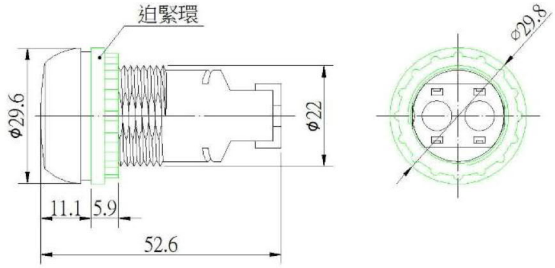

Control Box (M22B1) – *1 hole*

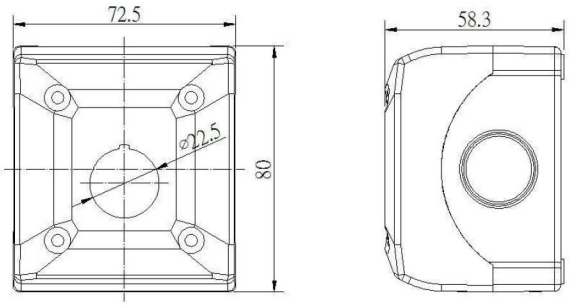

Control Box (M22B2) – *2 holes*

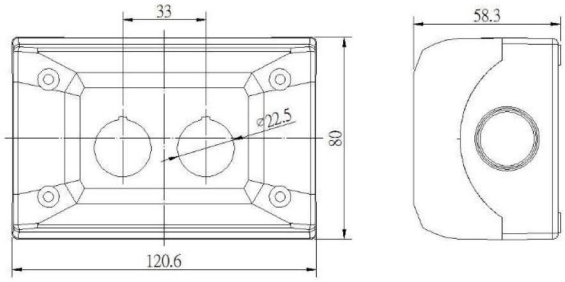

Control Box (M22B3) – *3 holes*

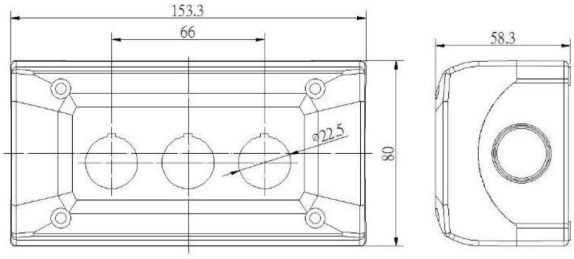

Contact Block (PF) -
PCB terminal, Front facing

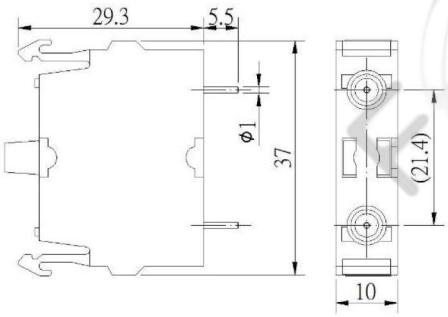

Contact Block (SF) -
Screw terminal, Front facing

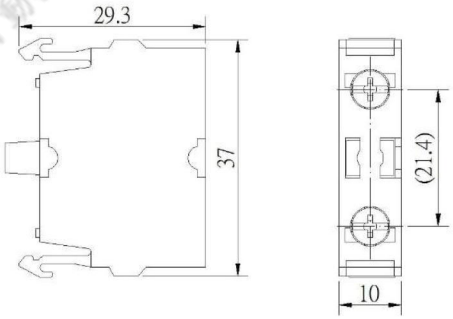

Contact Block (SB) -
Screw terminal, Back facing (for M22 Box)

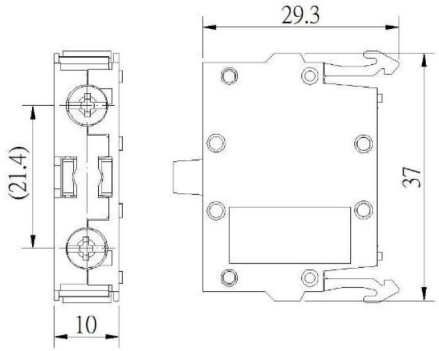

Adapter for front facing buckle contact blocks (A3)

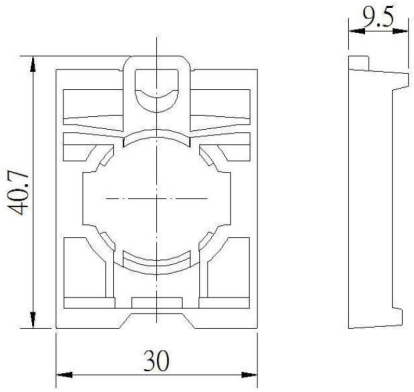

Dimensions with front facing
PCB terminal contact block installation

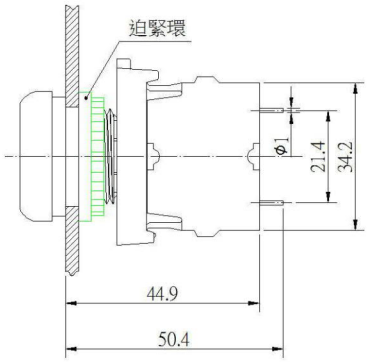

Dimensions with front facing
Screw terminal contact block installation

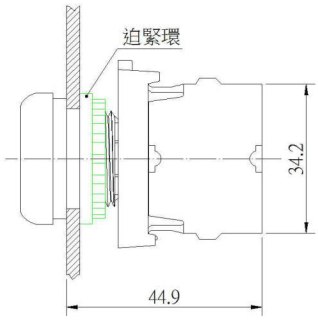

◆ Panel cut-outs

*Measurements in *millimeters*

⚠All M22-series products fits best in a circular panel cut out that measures 22.3mm in diameter, with a thickness of 1~4.5mm. Panels thicker than this may cause products to be secured improperly. Damage and bad operation may occur if installed onto incorrect through-holes or with incorrect tightening forces.

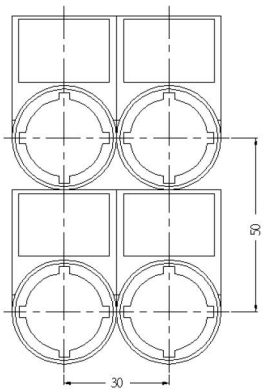

Multiple labeling (excl. M22DP)

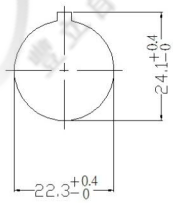

Single unit panel cut-out

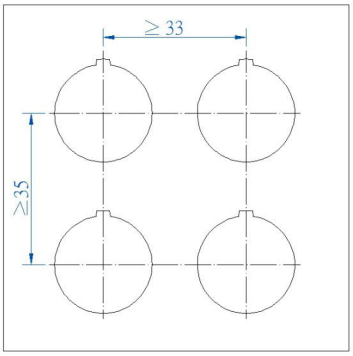

Multiple units
panel cut-out (excl. M22DP)

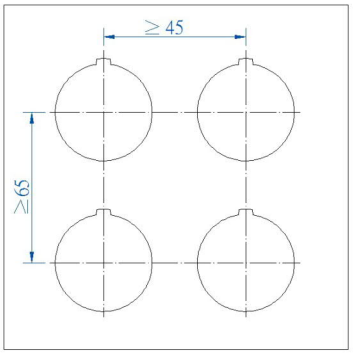

Multiple units
panel cut-out (for M22DP)